Simulation of Improved Absorption Configurations for CO_2 Capture

Solomon Aforkoghene Aromada[1] Lars Erik Øi[1]

[1]Department of and Process, Energy and Environmental Technology, Telemark University College, Norway
lars.oi@hit.no

Abstract

The most well-known technology for post combustion CO_2 capture from exhaust gas is absorption in an amine-based solvent followed by desorption. The drawback of this method is the high heat consumption required for desorption. Reduction of the energy consumption can be achieved by using alternative configurations. In this work, the standard process, vapour recompression and vapour recompression combined with split-stream configurations have been simulated using Aspen HYSYS version 8.0 for 85% amine-based CO_2 removal in search for optimum process. Energy optimisation has also been performed by varying the most important parameters. This study shows that it is possible to reduce energy consumption with both the vapour recompression and the vapour recompression combined with split-stream processes. The vapour recompression process has been calculated to be the energy optimum alternative among the configurations investigated.

Keywords: CO_2, simulation, absorption, Aspen HYSYS, optimisation, MEA.

1 Introduction

Absorption of CO_2 in an amine based solvent like monoethanolamine (MEA) followed by desorption is the most standard technology for large scale post combustion CO_2 capture from exhaust gas. However, the high equivalent heat consumption requirement for desorption is an enormous challenge. Research efforts have been targeted at reducing the energy cost, usually referred to as "energy penalty". According to (Rochelle, 2003), the energy requirement is estimated to be 15-30% of power plant output. (Le Moullec and Kanniche, 2011) calculated it to be about 25% loss of power output when coupled with compression.

The traditional approach for reducing energy consumption of amine-based absorption and stripping of CO_2 has been by the modification of process flow sheets. This work seeks to find an energy optimum process by simulation of alternative configuration energy demands and optimisation of such processes.

1.1 Literature on CO_2 absorption

Different ways exist for reduction of heat consumption in a CO_2 capture process using alternative configurations. In the case of high absorption pressures, (Kohl, 1997) presented some alternative configurations in the reference book. (Polasek, 1982) also show a systematic overview of alternative flow schemes for CO_2 absorption at high pressures.

(Aroonwilas, 2006) have evaluated alternative CO_2 post combustion capture configurations. (Oyenekan and Rochelle, 2007) proposed different stripper configurations for energy reduction. (Cousins, Wardhaugh and Feron, 2011) evaluated four alternative configurations and compared their performance with a standard process configuration. (Cousins, Wardhaugh, and Feron, 2011) published a survey of 15 process flow sheet modifications for energy efficient CO_2 capture from flue gases using chemical absorption. (Le Moullec and Kanniche, 2011) also presented some flow sheet modifications with 8 minor modifications. (Fernandez, 2012) did cost estimation based on net present value from Aspen Plus simulations. (Karimi, Hillestad and Svendsen, 2011) have conducted process simulations with Unisim Design and Protreat and also evaluated the capital cost of the alternative configurations.

However, much work has not been published on calculations or simulations of alternative absorption configurations for CO_2 capture from flue gas (Øi et al., 2014; Øi and Shchuchenko, 2011).

At Telemark University College, (Øi and Vozniuk, 2010) have used Aspen HYSYS version 7.2 to evaluate and compare the split-stream scheme with the standard process. Different split-stream modifications and vapour recompression scheme were evaluated using Aspen HYSYS by (Øi and Shchuchenko, 2011). (Øi et al., 2014) did optimisation based only on absorber packing height and minimum approach temperature in the heat exchanger. (Øi and Kvam, 2014) also have evaluated and compared energy consumption of alternative configurations for CO_2 removal using Aspen HYSYS and Aspen Plus simulation programs. But their work did not cover energy optimisation as a function of absorber and desorber column height and minimum approach temperature in the heat exchanger. This paper presents simulations of different alternative process configurations and a more comprehensive optimisation of such processes towards the reduction of the energy requirements for amine based CO_2 absorption and desorption. The simulation program used is Aspen HYSYS version 8.0. And optimisation based on variation of the most important parameters is conducted.

2 Process description

The principles of the different alternative configurations are described in this section.

2.1 Standard process

Alternative configurations performances are mainly evaluated by comparison with the standard process as a reference configuration. It comprises of a simple absorber and desorber (stripper) with a reboiler and condenser, amine/amine heat exchanger, pumps and a cooler. CO_2 from an exhaust gas is absorbed in the absorption column with amine solvent (e.g. monoethanolamine-MEA). The CO_2-rich amine solution from the absorption column is then pumped through the lean/rich amine heat exchanger where it is heated before entering the stripper for regeneration. The regenerated (lean) amine is pumped back to the absorption column for re-use. It first flows through the amine/amine heat exchanger where it is used to heat up the rich stream and further cooled in the amine cooler. Figure 1 describes the principle of the standard amine-based CO_2 absorption-desorption process.

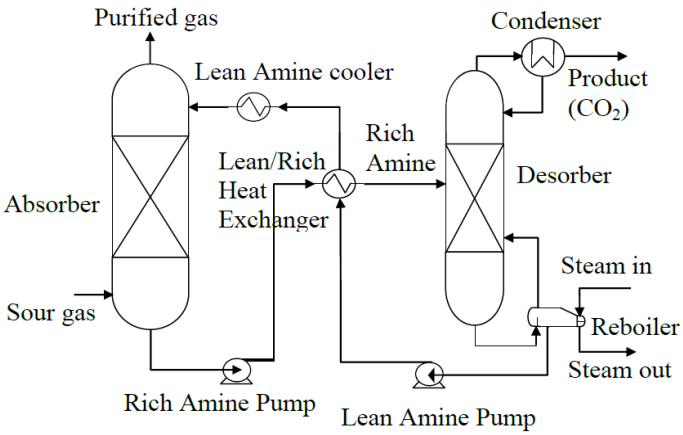

Figure 1. Principle of standard process

2.2 Vapour recompression process

The only difference between the vapour recompression and the standard process configurations is that the regenerated amine from the bottom of the stripper is flashed by creating a pressure drop using a valve. The resulting vapour is separated from the lean amine stream by the use of a gas/liquid separator. The vapour is then compressed and injected back to the desorber to aid the regeneration process. The result is an increase of the stripping vapour in the desorber but leaving the water balance of the system unaffected (Cousins et al., 2011). Figure 2 shows the principle of vapour recompression.

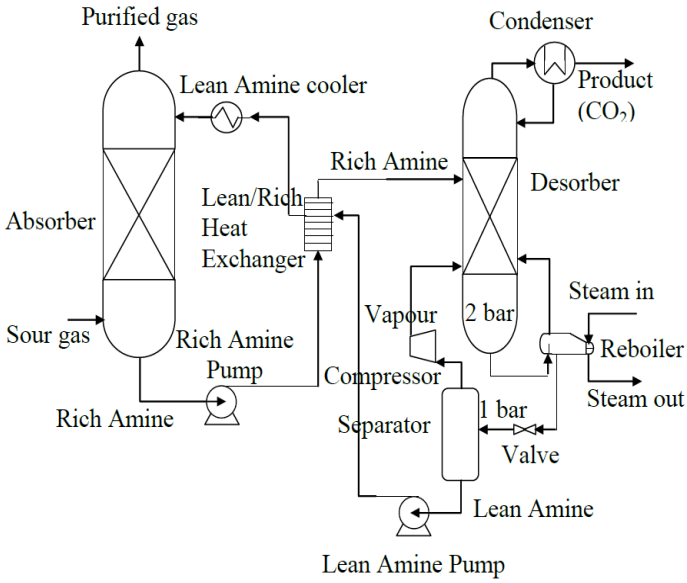

Figure 2. Principle of vapour recompression process

2.3 Vapour recompression process combined with split-stream process

This configuration combines both the vapour recompression process and split-stream process to harness the energy reduction benefit of both processes. In this process, the semi-lean amine can either be drawn from the middle or from the stream exiting the stripper before it is flashed for vapour recompression. Figure 3 describes vapour recompression combined with split-stream process with the semi-lean drawn from the bottom of the stripper.

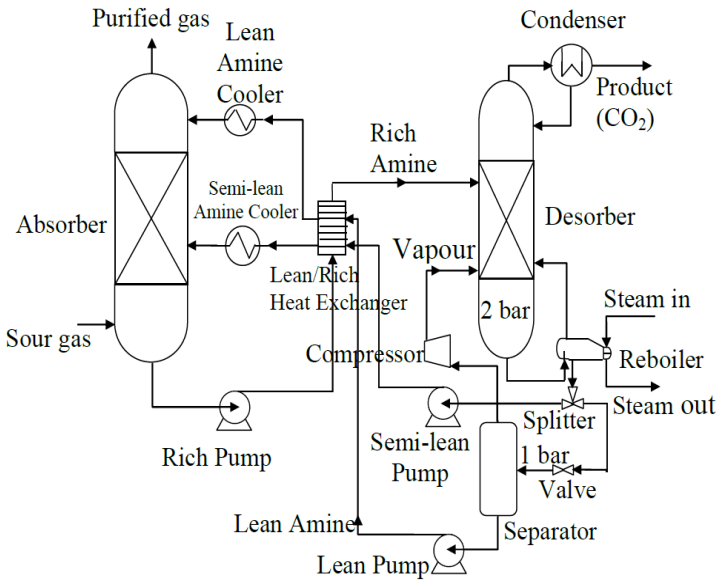

Figure 3. Principle of vapour recompression combined with split-stream process

DOI
10.3384/ecp1511921

3 Models

This section presents the most important models required for the simulations.

3.1 Equilibrium models

The available models in the Amine Property Package in Aspen HYSYS are the Kent-Eisenberg (Kent and Eisenberg, 1976) and Li-Mather (Li, 1996) vapour/liquid equilibrium models. "The models are quite complex" (Øi, 2007). Equilibrium of CO_2 concentration in the gas and liquid (absorbent) is described by the use of these models. Either of them can be selected with the Non-ideal vapour phase model for simulation.

3.2 Column models

Columns are usually modelled by the use of equilibrium stages. A plate/tray is evaluated by the assumption that the concentration of CO_2 in the gas and liquid leaving plate/tray are in equilibrium. A given packing height (e.g., 1m) can be modelled as an equilibrium stage. Murphree efficiency can be introduced to refine the equilibrium stage model and it is given as (Øi, 2007):

$$E_M = \frac{(y - y_{n-1})}{(y^* - y_{n-1})} \quad (1)$$

Where y is the mole fraction of CO_2 in the gas leaving the stage, y_{n-1} is the mole fraction of CO_2 leaving the stage below, and y^* is mole fraction of CO_2 in equilibrium with the liquid leaving the stage. In Aspen HYSYS, the user can specify the Murphree efficiency. Some references (Øi, 2007; Øi et al., 2014; Øi and Shchuchenko, 2011; Øi and Vozniuk, 2010) have used the values of 15% and 25%. Figure 4 illustrates the definition of Murphree efficiency.

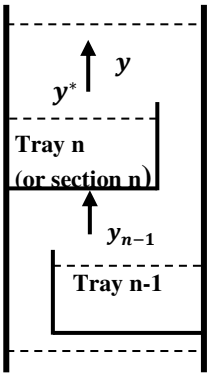

Figure 4. Illustration of of Murphree efficiency (Øi, 2007)

3.3 Column convergence

There is a default set of convergence criteria and a default set of calculation parameters in Aspen HYSYS. "Different calculation models are also available" (Øi, 2007). The default is the HYSIM Inside-Out algorithm. There is also the Modified HYSIM Inside-Out algorithm which usually enhances convergence in more complex process simulations. "A damping parameter for column iteration is adjustable and the damping can be specified as adaptive" (Øi, 2007).

4 Process specifications and simulations

This section has the specifications, results and discussion on the base case simulations.

4.1 Specifications and simulation of standard process for CO_2 capture

Simulation of a standard process for CO_2 capture with Aspen HYSYS V8.0 has been performed. The specifications used are presented in Table 1.

Table 1. Standard process simulation input specifications for 85% CO_2 removal

Parameter	Value
CO_2 removal grade	85%
Inlet gas pressure	40°C
Inlet gas pressure	1.1 bar
Inlet gas molar flow rate	85540 kmol/h
CO_2 in inlet gas	3.73%
Water in inlet gas	6.71%
Nitrogen in inlet gas	89.56%
Lean MEA temperature	40°C
Lean MEA pressure	1.01 bar
Lean MEA molar flow rate	116500 kmol/h
MEA content in Lean MEA	28.2 mass-%
CO_2 in Lean MEA	5.3 mass-%
Number of stages in absorber	20
Murphree efficiency in absorber	0.15
Rich MEA pump pressure	2 bar
Rich MEA to desorber temperature	104.3°C
Number of stages in desorber	6 (2 + 4)
Murphree efficiency in desorber	1
Reflux ratio in desorber	0.3
Reboiler temperature	120°C
Lean MEA Pump pressure	4 bar
Minimum ΔT in Rich/Lean Heat Exchanger	10°C

The calculation method used is the same as in (Øi, 2007; Øi, 2012). These specifications are from a full scale Mongstad project from Gassnova. They are for 85% CO_2 absorption from a natural gas based power plant planned at Mongstad outside Bergen (Øi, 2007). Simulations have been performed using Amine Property Package with the Kent-Eisenberg equilibrium model (Kent and Eisenberg, 1976) and non-ideal vapour phase model. And the Li-Mather equilibrium model (Li, 1996) has also been used but for comparison purpose. Besides the optimisation calculations, all the simulations in this work have specifications of 20 absorber stages with a Murphree efficiency of 0.15 (Øi, 2012) and a minimum approach temperature of 10°C. The Aspen HYSYS flow diagram is given in Figure 5.

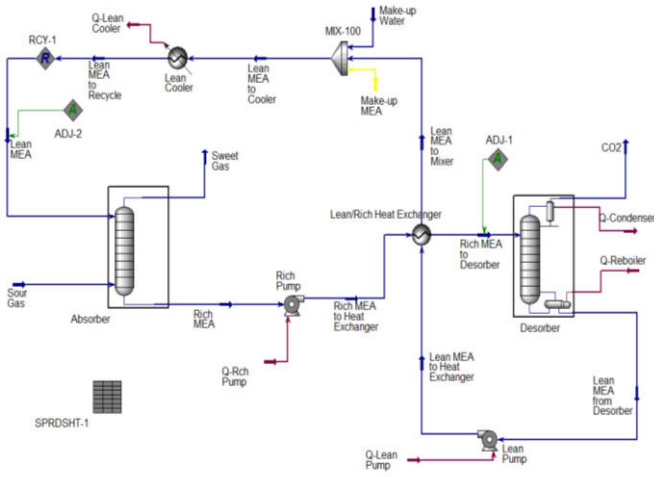

Figure 5. Aspen HYSYS flow sheet of standard process for CO_2 absorption-desorption in amine solution

The calculated heat consumptions are presented in Table 2. They are just slightly lower than other references (Cousins et al., 2011; Jordal et al., 2012; Karimi et al., 2011; Øi, 2007; Øi and Shchuchenko, 2011; Øi and Vozniuk, 2010). This is due to high number of absorber stages and in some cases the lower removal grade used. However, (Karimi et al., 2011; Øi et al., 2014; Øi and Kvam, 2014) calculated values less than the ones presented in this paper. This is as a result of the use of a lower minimum approach temperature in the amine/amine heat exchanger.

The simulation results of (Kothandaraman, 2010) for typical conditions are 4.30 MJ/kg CO_2 and 4.50 MJ/kg CO_2 with Aspen Plus equilibrium based model and rate-based model respectively. With Aspen Plus version 7.1 and 3 equilibrium stages in the absorber, 3.56 MJ/kg CO_2 was simulated by Fernandez et al. (Fernandez, 2012). 3.55 MJ/kg CO_2 and 3.61 MJ/kg CO_2 were calculated by Karimi et al. (Karimi et al., 2011) with 5°C and 10°C minimum approach temperature (ΔT_{min}) respectively using Unisim. Unisim is a version of Aspen HYSYS and also has the same Amine Property Packages as Aspen HYSYS with Kent-Eisenberg and Li-Mather vapour/liquid equilibrium models (Øi and Kvam, 2014).

4.2 Specifications and simulation of vapour recompression process for CO_2 capture

Simulation of 85% CO_2 removal has been performed using the vapour recompression principle as presented in Figure 2. The calculation method is similar to that in Section 4.1. The Aspen HYSYS flow diagram is presented in Figure 6. The lean amine flow rate that achieved 85% CO_2 removal is 106300kmol/h with CO_2 concentration of 5.08% (lean loading of 0.18 and rich loading is 0.35). The compressor's adiabatic efficiency is 75%.

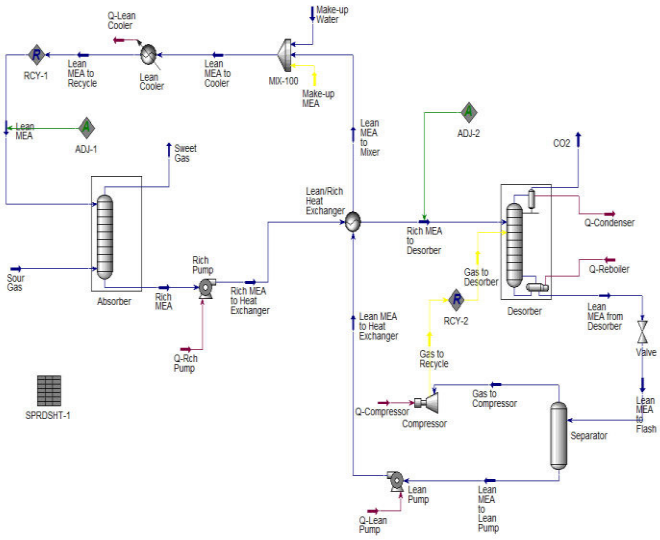

Figure 6. Aspen HYSYS flow sheet of vapour recompression process for CO_2 absorption-desorption in amine solution

The results of the vapour recompression simulation are given in Table 2. Energy savings of 0.37 MJ/kg CO_2 (10%) and 0.31 MJ/kg CO_2 (9%) with Kent-Eisenberg and Li-Mather models respectively were achieved. The equivalent heat consumption is calculated as the sum of the reboiler heat consumption and four times the compressor work. This is because it is assumed that about 25% efficiency can be obtained by converting the low pressure steam used by the reboiler to electricity by a steam turbine (Øi et al., 2014; Øi and Kvam, 2014). 1/0.28 and 1/0.23 were used by (Le Moullec and Kanniche, 2011) and (Fernandez, 2012) respectively.

(Cousins et al., 2011) calculated a reboiler heat consumption of 3.04 MJ/kg CO_2 with a rate-based simulation program (program type not mentioned) and achieved a reboiler heat saving of 0.71 MJ/kg CO_2. In this paper, it is 0.82 MJ/kg CO_2 and 0.75 MJ/kg CO_2

with Kent-Eisenberg and Li-Mather models respectively. And (Fernandez, 2012) simulation results using Aspen Plus equilibrium model, with a flash pressure of 1.2 bar and desorber pressure of 1.8 bar, gave a reboiler duty of 3.03 MJ/kg CO_2 (this is almost equal to (Cousins et al., 2011) result) and equivalent heat consumption of 3.30 MJ/kg CO_2 removed. With a desorber pressure of 2.5 bar, (Le Moullec and Kanniche, 2011) calculated a lower reboiler heat consumption of 2.56 MJ/kg CO_2. This may likely be due to the difference of 0.5 bar pressure of the stripper between their work and this study. Using Unisim program, (Karimi et al., 2011) calculated a reboiler heat consumption of 2.72 MJ/kg CO_2 compared to 3.61MJ/kg CO_2 of the standard process.

4.3 Specifications and simulation of vapour recompression combined with split-stream process for CO_2 capture

This is the most complex configuration among the three under consideration. The calculations are more challenging and more complicated. It involves three (3) recycle blocks. The calculation sequence and most of the specifications used in simulating this configuration are the same as the recompression process. The difference is that the regenerated amine stream is split into two at a ratio of 0.1 and 0.9 for the semi-lean and the lean amine streams respectively.

The semi-lean was sent to stage 8 of the absorber because it gives the best result (though negligible). The absorber liquid feeds are 10690 kmol/h (with CO_2-mass concentration of 5.35%) of the semi-lean flow and 96300 kmol/h (with CO_2-mass concentration of 5.05%) of the lean amine after make-up water and amine have been added to the stream at the mixer. The Aspen HYSYS process flow diagram (PFD) is shown Figure 7.

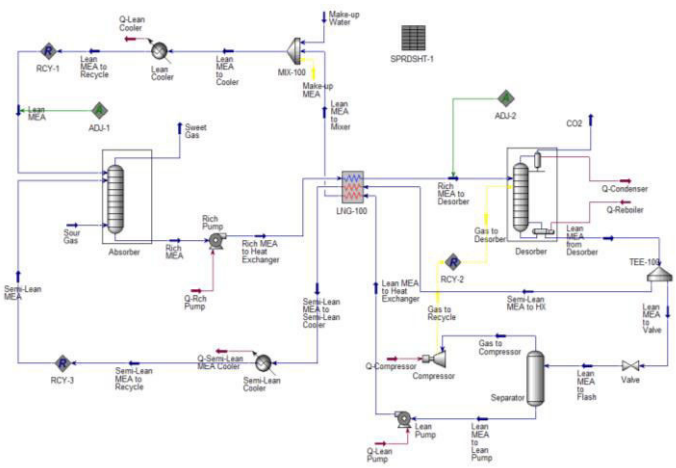

Figure 7. Aspen HYSYS flow sheet of vapour recompression process+split-stream for CO_2 capture.

The equivalent heat consumption is calculated as in the case of vapour recompression. The Kent-Eisenberg and Li-Mather vapour/liquid equilibrium models results are presented in Table 2. These results show that the energy savings in CO_2 removal with this configuration are 0.34 MJ/kg CO_2 (9%) and 0.29 MJ/kg CO_2 (8%) using the Kent-Eisenberg and the Li-Mather models respectively. However, the equivalent heat consumption is still 0.03 MJ/kg CO_2 higher than the result achieved with the vapour recompression configuration.

(Øi et al., 2014) calculated 3.02 MJ/kg CO_2 with Aspen HYSYS as the equivalent heat consumption with 20 absorber stages and semi-lean stream sent to stage 14 of the absorber. Murphree efficiency of 0.15 was specified for the absorber. This value was lower because a 5°C was specified as the minimum approach temperature for their simulation. (Øi and Kvam, 2014) calculated 3.12 MJ/kg CO_2 and 3.03 MJ/kg CO_2 with Aspen HYSYS Kent-Eisenberg and Li-Mather equilibrium models respectively. These values are also lower than the results achieved in this study because they simulated with a lower ΔT_{min} of 5°C. With 24 absorber stages and the semi-lean stream sent to stage 13, (Øi and Shchuchenko, 2011) calculated a reboiler heat consumption of 2.45 MJ/kg CO_2 and 2.59 MJ/kg CO_2 as reboiler heat with split-streams from the bottom and middle of the reboiler respectively. In this paper and the other references mentioned, it has been shown that combining the vapour recompression with the split-stream processes cannot achieve lower equivalent heat consumption as the vapour recompression in spite of the advantage of the reduced compressor work.

4.4 Calculation strategy and sequence

The simulation strategy was based on earlier Aspen HYSYS simulations by (Øi, 2007) and (Kvam, 2013).

The compositions, flow rates, temperatures and pressures of the flue gas and lean amine solution flowing as feeds into the absorber were first specified. Then the absorption column was calculated. Subsequently, the rich pump was calculated followed by the rich side of the lean/rich heat exchanger and then the desorber. After the desorber, in the case of the vapour recompression combined with split-stream process, the split was executed at the ratio of 1 to 9 for the semi-lean and lean streams respectively. Then the resulting lean amine stream was flashed and vapour/liquid separation done. By the aid of an ADJUST block, the temperature of the rich amine stream to the desorber was adjusted such that the specified minimum approach temperature (ΔT_{min}) in the heat exchanger was achieved. The lean pump, vapour compressor and coolers were then calculated. The compositions of both the lean and semi-lean streams were checked (in RECYCLE blocks) against

the specified feeds compositions to the absorber (particularly CO_2-concentration) to ensure convergence. Whenever it was difficult to reach convergence, it was expedient to check if the material balance of water and amine are fulfilled if not the required make-up water and amine were manually inputted. Then the specified CO_2 removal efficiency of 85% was achieved by adjusting (with the aid of an ADJUST block) the lean amine flow rate. The Modified HYSYM Inside-Out solver with adaptive damping was used to calculate the columns because better convergence is achieved.

In the case of vapour recompression combined with split-stream, the semi-lean stream column feed stage was optimised such that the column stage that gave the lowest heat consumption was selected.

4.5 Comparison of the energy consumption of alternative configurations

The summary of the simulation results of the three configurations are presented in Table 2. Significant energy savings were calculated for vapour recompression and vapour recompression combined with split-stream with both the Kent-Eisenberg and Li-Mather models respectively. The vapour recompression simulations recorded the lowest energy consumption with both Kent-Eisenberg and Li-Mather. The vapour recompression process has the highest rich loading in both simulations with Kent-Eisenberg and Li-Mather models. The vapour recompression combined with split-stream has the lowest rich loading with Kent-Eisenberg model while it is the standard process in the case of Li-Mather.

5 Energy optimisation

In this section, the energy consumption is calculated under varying conditions to seek for the optimum conditions. All simulations were done with Kent-Eisenberg equilibrium model.

5.1 Equivalent heat consumption as a function of absorber packing height

The vapour recompression and vapour recompression combined with split-stream were optimised by varying different process units (equipment) parameters to achieve a better energy saving with the Kent-Eisenberg model.

Both configurations could not yield significant result by increasing the number of absorber stages more than 20. The vapour recompression process simulations diverge with 24 absorber stages and above. While simulations with vapour recompression combined with split-stream diverge with 23 absorber stages and above.

5.2 Equivalent heat consumption as a function of desorber packing height

Varying the number of desorber stages from 6-20, the vapour recompression optimum heat consumption of 3.18 MJ/kg CO_2 (1% < standard case) was achieved with 9 stages. While it was 3.21 MJ/kg CO_2 (about 2% <standard case) with 10 stages for the vapour recompression combined with split-stream configuration. Optimisation of the conventional desorber number of stages might be new as no literature was found to compare results with. It is necessary to make economic evaluation of increasing the number of desorber stages to confirm if it is worthwhile. The results are shown in Figure 8.

Table 2. Summary of simulation results for CO_2 absorption and desorption using Kent-Eisenberg and Li-Mather models

Process configuration	Equilibrium model	Rich loading	Reboiler heat	Compressor work	Equivalent heat	Energy savings	Relative energy savings
			[MJ/kg CO_2]				%
Base case	Kent-Eisenberg	0.4783	3.600		3.600	0	0
Vapour recompression		0.4792	2.785	0.1105	3.227	0.373	10
Vapour recompression + split-stream		0.4778	2.859	0.1003	3.260	0.340	9
Base case	Li-Mather	0.4758	3.516		3.516	0	0
Vapour recompression		0.4774	2.767	0.1105	3.209	0.307	9
Vapour recompression + split-stream		0.4769	2.826	0.0997	3.225	0.291	8

DOI 10.3384/ecp1511921

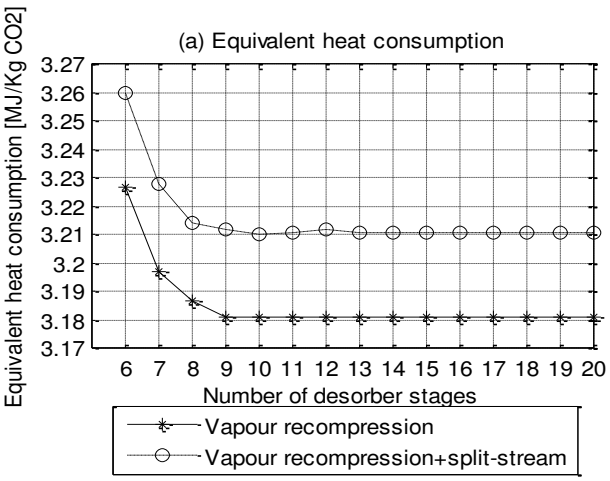

Figure 8. Equivalent heat consumption as a function of number of desorber stages

5.3 Equivalent heat consumption as a function of flash pressure (P_{flash})

Optimum energy consumption of 3.21 MJ/kg CO_2 (0.5%) was achieved at a flash pressure of 1.2 bar and 3.25 MJ/kg CO_2 (0.4%) at 1.1-1.2 bar with the vapour recompression and vapour recompression combined with split-stream respectively. (Kvam, 2013) achieved optimum flash pressures at 1.01-1.2 bar and 1.01 bar with the vapour recompression and vapour recompression combined with split-stream respectively. (Le Moullec and Kanniche, 2011) achieved optimum at around 1.25 bar for the vapour recompression process with 2.5 bar stripper pressure. (Karimi et al., 2011) stated about 1.12-1.17 bar as the optimum flash pressure. And it may be between 1.1 to 1.2 bar for the vapour recompression combined with split-stream configuration. Flash pressure optimisation results are given in Figure 9.

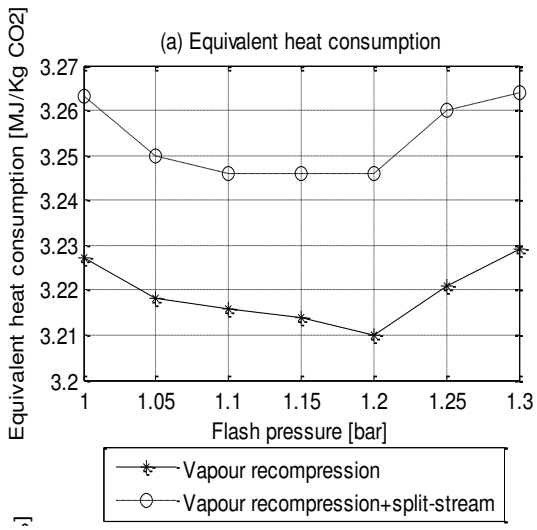

Figure 9. Equivalent heat consumption as a function of flash pressure.

5.4 Equivalent heat consumption as a function of minimum approach temperature (ΔT_{min})

According to (Øi, 2012), the suggested reasonable minimum approach temperatures (ΔT_{min}) in literatures are between 5 and 20°C. In this paper ΔT_{min} was varied from 10 to 3°C to reduce the energy consumption. The major objective here is to compare heat consumption values at 10 and 5°C. The results are displayed in Figure 10. The equivalent heat consumption decreased almost linearly from 10 to 3°C. 0.23 MJ/kg CO_2 (7%) and 0.23 MJ/kg CO_2 (7%) of heat consumption were saved in the case of vapour recompression and vapour recompression combined with split-stream configurations respectively. Karimi et al. (2011) calculated a reboiler heat reduction from 2.72 to 2.60 MJ/kg CO_2 (about 5%). But (Tobiesen, 2005) argued that reduction of ΔT_{min} will not result in reduction of the reboiler heat. However, in this work, the energy saving is significant.

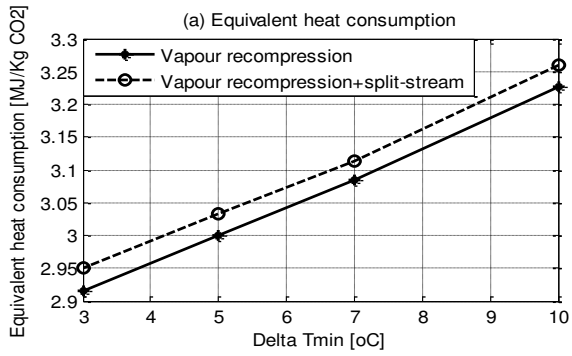

Figure 10. Equivalent heat consumption as a function of minimum approach temperature

5.5 Selection of optimum configuration and operation conditions

Based on the optimisation of the four process parameters in subsection 5.1-5.4 above, the vapour recompression achieved lower heat consumption in all cases; therefore it is a more reasonable option. **Table 3** presents the selected optimum and reasonable values from the four process parameters. ΔT_{min} of 5°C has been chosen as the most reasonable option because the heat exchange area required for 3°C is much larger than 5°C.

Table 3. Energy optimum specifications using Kent-Eisenberg model

Specification	Value	Reason
Number of absorber stages	20	No remarkable improvement after 20 stages
Number of desorber stages	9	Optimum
Valve outlet pressure [bar]	1.2	Optimum
ΔT_{min} [°C]	5	Lowest energy (Øi, 2012)

5.6 Comparison of optimum configuration with the three standard process configurations

Table 4 and Figure 11 summarize the results of this study. The optimised vapour recompression process achieved the highest energy savings. This is 19% and 9% of the standard process and the ordinary vapour recompression equivalent heat consumptions respectively. Considering only reboiler heat consumption, it is 25% energy savings over the base case process.

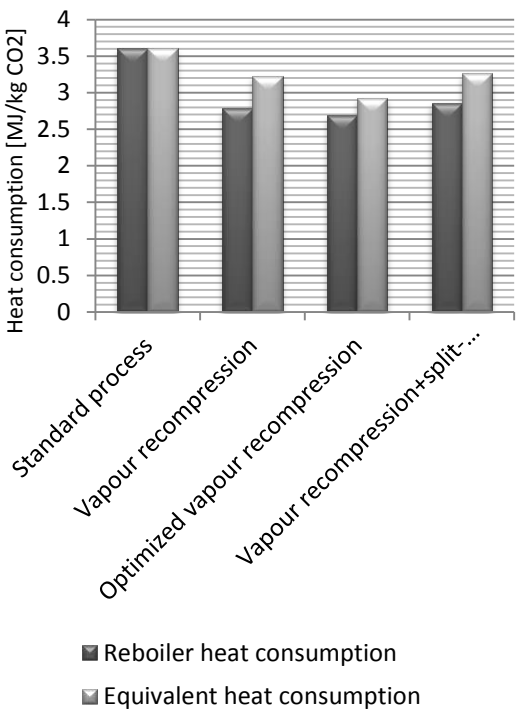

Figure 11. Comparison of optimum configuration with other three standard process configurations

Table 4. Comparison of optimum configuration with the three standard process configurations

Process configuration	Rich loading	Reboiler heat	Compressor work	Equivalent heat	Energy savings	Relative energy savings
		[MJ/kg CO_2]				%
Base case	0.4783	3.600	-	3.600	0	0
Vapour recompression	0.4792	2.785	0.1105	3.227	0.373	10
Energy optimised vapour recompression	0.4792	2.684	0.0609	2.927	0.673	19
Vapour recompression+split-stream	0.4778	2.859	0.1003	3.260	0.340	9

(Karimi et al., 2011) calculations with Unisim Design and ProTreat show about 28% energy savings with the vapour recompression processing using ΔT_{min} of 5°C over the base case with ΔT_{min} of 10°C. Therefore, optimizing the vapour recompression process may significantly result in energy requirements of an amine based CO_2 capture plant.

5.7 Accuracy

The calculated results change slightly with reference to initial values when simulating with the same specifications. In the case of the CO_2 removal grade, the accuracy is usually ±0.05% (absolute). And in the case of equivalent heat consumption, it is just a few per cent (%), usually within ±0.006 MJ/kg CO_2 (absolute). The uncertainty with equilibrium is most likely higher.

6 Conclusion

Simulation and optimisation of an amine-based CO_2 removal process from an exhaust gas from natural gas power plant have been performed in the quest for an energy optimum process. The process configurations investigated are the standard process, vapour recompression process and the vapour recompression combined with split-stream process.

This study shows that it is possible to reduce energy consumption with both the vapour recompression and the vapour recompression combined with split-stream. The vapour recompression configuration shows the lowest energy consumption from simulations. Optimisation of parameters like number of desorber stages, flash pressure and minimum approach temperature is important to achieve a better energy saving.

The vapour recompression process with 20 absorber stages, 9 desorber stages, 1.2 bar flashing pressure and ΔT_{min} of 5°C is found to be the optimum alternative. It achieves 19% energy saving compared to the standard process. The authors are currently investigating for the cost optimum process when considering investment.

References

Aroonwilas, A., Veawab, A. (2006). *Cost structure and performance of CO2 capture unit using split-stream cycle*. Paper presented at the 8th International Conference on Greenhouse Gas Control Technologies (GHGT-8), Trondheim, Norway.

Cousins, A., Wardhaugh, L. T., & Feron, P. H. M. (2011). Preliminary analysis of process flow sheet modifications for energy efficient CO2 capture from flue gases using chemical absorption. *Chemical Engineering Research and Design, 89*(8), 1237-1251. doi: http://dx.doi.org/10.1016/j.cherd.2011.02.008

Cousins, A., Wardhaugh, L. T., & Feron, P. H. M. (2011). A survey of process flow sheet modifications for energy efficient CO2 capture from flue gases using chemical absorption. *International Journal of Greenhouse Gas Control, 5*(4), 605-619. doi: http://dx.doi.org/10.1016/j.ijggc.2011.01.002

Fernandez, E. S., Bergsma, E.J., de Miguel Mercader, F, Goetheer, E.L.V., Vlugt, T.J.H. (2012). Optimisation of lean vapour compression LVC as an OPTION for post-combustion CO2 capture: Net present value maximisation. *International Journal of Greenhouse Gas Control, 11*, 114-121. doi: http://dx.doi.org/10.1016/j.ijggc.2012.09.007

Jordal, K., Ystad, P.A.M., Anantharaman, R., Chikukwa, A., Bolland, O. (2012). Design-point and part-load considerations for natural gas combined cycle plants with post combustion capture. *International Journal of Greenhouse Gas Control, 11*, 271-282.

Karimi, M., Hillestad, M., & Svendsen, H. F. (2011). Capital costs and energy considerations of different alternative stripper configurations for post combustion CO2 capture. *Chemical Engineering Research and Design, 89*(8), 1229-1236. doi: http://dx.doi.org/10.1016/j.cherd.2011.03.005

Kent, R. L., Eisenberg, B. (1976). Better data for amine treating. *Hydrocarbon processing, 55*(No.2), 87-90.

Kohl, A., Nielsen, R. (1997). *Gas Purification* (5th ed. ed.). Houston, Texas: Gulf Publications.

Kothandaraman, A. (2010). *Capture by chemical absorption: a solvent comparison study.* (PhD PhD Thesis), Massachusetts Institute of Technology, Boston.

Kvam, S. H. P. (2013). *Vapour recompression in absorption and desorption process for CO2 capture.* (Master of Science), Telemark University College, Porsgrunn, Norway.

Le Moullec, Y., & Kanniche, M. (2011). Screening of flowsheet modifications for an efficient monoethanolamine (MEA) based post-combustion CO2 capture. *International Journal of Greenhouse Gas Control, 5*(4), 727-740. doi: http://dx.doi.org/10.1016/j.ijggc.2011.03.004

Li, Y.-G., and Mather, A. (1996). Correlation and prediction of the solubility of CO2 and H2S in aqueous solutions of triethanolamine. *Ind. Eng. Chem. Res., 35* (12), 4804–4809.

Øi, L. E. (2007). *Aspen HYSYS simulation of CO2 removal by amine absorption a gas based power plant*. Paper presented at the The 48th Scandinavian Conference on Simulation and Modelling (SIMS2007) Göteborg, Sweden.

Øi, L. E. (2012). *Removal of CO2 from exhaust gas.* (PhD Thesis), Telemark University College, Porsgrunn. (TUC 3: 2012)

Øi, L. E., Bråthen, T., Berg, C., Brekne, S. K., Flatin, M., Johnsen, R., Thomassen, E. (2014). Optimization of Configurations for Amine based CO2 Absorption Using Aspen HYSYS. *Energy Procedia, 51*(0), 224-233. doi: http://dx.doi.org/10.1016/j.egypro.2014.07.026

Øi, L. E., & Kvam, S. H. P. (2014). Comparison of Energy Consumption for Different CO2 Absorption Configurations Using Different Simulation Tools. *Energy Procedia, 63*(0), 1186-1195. doi: http://dx.doi.org/10.1016/j.egypro.2014.11.128

Øi, L. E., Shchuchenko, V. (2011). *Simulation of energy reduction in CO2 absorption using split-stream configurations*. Paper presented at the 4th International Scientific Conference on Energy and Climate Change, Athens.

Øi, L. E., Vozniuk, I.O. (2010). Optimizing CO2 absorption using split-stream configuration. *Process and Technologies for a Sustainable Energy, Ischia*.

Oyenekan, B. A., & Rochelle, G. T. (2007). Alternative stripper configurations for CO2 capture by aqueous amines. *AIChE Journal, 53*(12), 3144-3154. doi: 10.1002/aic.11316

Polasek, J. C., Bullin, J.A., Donnely, S.T. (1982). *Alternative flow schemes to reduce capital and operationg costs of amine sweetening units.* Paper presented at the Proceedings, AIChE Spring National Meeting, AIChE, New York.

Rochelle, G. T. (2003). *Innovative Stripper Configurations to Reduce the Energy Cost of CO_2 Capture* Paper presented at the Second Annual Carbon Sequestration Conference, Alexandria, VA.

Tobiesen, F. A., Svendsen, H.F, Hoff, K.A. (2005). Desorber energy consumption amine based absorption plant. *International Journal of Green Energy, 2*, 201-215.